PARIS SERVER UNIT ASSEMBLY INSTRUCTIONS

Thank you for supporting us.

We believe design belongs to everyone. From materials and processes to saftey testing, production and delivery, we are passionate and committed to bringing you the best possible product so you can create a beautifully space to feel comfortable in.

Here are a few assembly tips before you get started:



Make Time

The first step to all seamless assembly is taking a moment to carfully read through the instructions- you are already on your way to create a beautifully functional space!



Set The Mood

Put on your favourite playlist, order a pizza and pour yourself a drink to get in the mood!



Tool Check

Layout the instructions, screws and panels to check you have everything you need. A blanket or soft floor rug will help protect your new favourite item from scratches and a drill will speed up the assembly too!



Room Reveal

You Did it! Take a step back and enjoy the moment. Don't forget to recycle any packaging.

Creating your home

PARIS SERVER UNIT ASSEMBLY INSTRUCTIONS

Parts List

1.	Left Side	X 1
2.	Right Side	X 1
3.	Bottom Panel	X 1
4.	Top	X 1
5.	Drawer Bottom 3mm	x 2
6.	Drawer Front	X 2
7.	Drawer Sides	X 4
8.	Drawer Rear	X 2
9.	Cleat	X 2
10.	Cabinet Backing 3mm	X2
11.	Partiotion	X 1
12.	Fixed Shelf	X 2
13.	Cabinet Doors	X 2

Hardware

A

Confirmat Screws
(use supplied Allen Key)



x 6

B

2 x Sets Drawer Runners
with 16 x Flat Screws



x 2

C

Cam



x 34

D

Cam Pins



x 34

E

Handle & Screws



x 4

F

T - Legs & 4 G-Screws



x 4

G

Overlay Hine &
8x16 Screwes (24)



x 2

H

Saftey Bracket

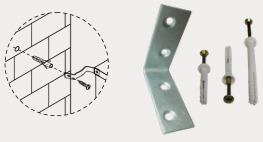

x 2

WARNING: Any furniture that is not anchored to a wall has the potential to tip over in certain circumstances, i.e. if a child attempts to climb up on the furniture or in the event of an earthquake. Accordingly, we recommend that all furniture is anchored to a wall.

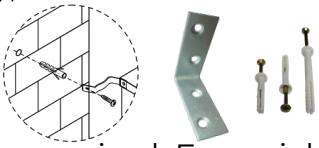

Saftey Bracket

Phillips screwdrivers required. For quicker assembly, we recommend the use of a power drill on a low-speed setting.

Time to assemble 30 min - People needed 1 - Difficulty level 6/10 - Tools needed - Phillips scredriver - allen key (supplied)

PARIS SERVER UNIT ASSEMBLY INSTRUCTIONS

CABINET ASSEMBLY

Step 1:

Attach drawer runners to sides and partition
Screw cam pins into small holes on sides and partition
Please note that the Partition gets cam pins and drawer runners on both sides- See markings on panel for position of runner
Insert Cams into big holes on sides and partition ensuring arrow on cam faces to nearest edge

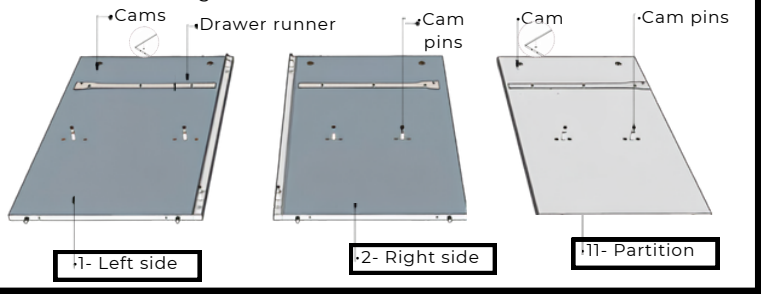

Step 2:

Insert Cams into big holes on cleats and fixed shelves ensuring arrow on cam faces to nearest edge.

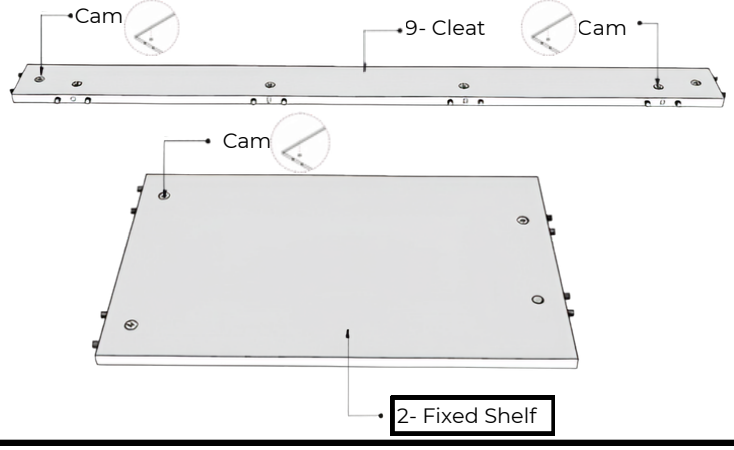

Step 3:

Screw cam pins into small holes in top and bottom

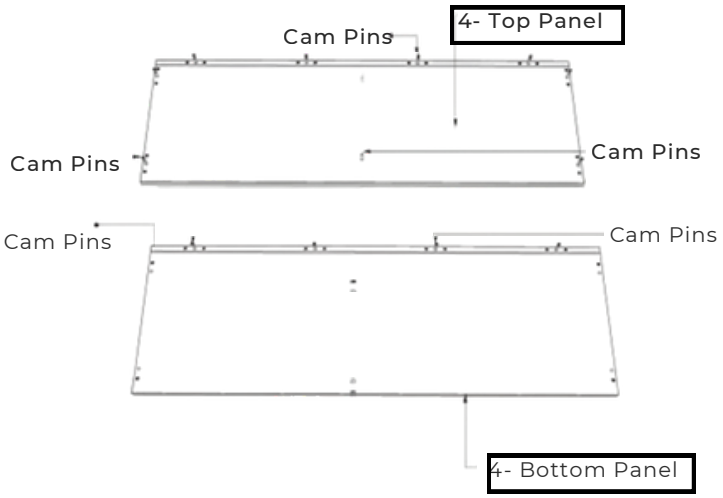

Step 4:

Attach left side to cleat by sliding in the cam pins into the holes on the cleat edge
Do not tighten the cams at this stage

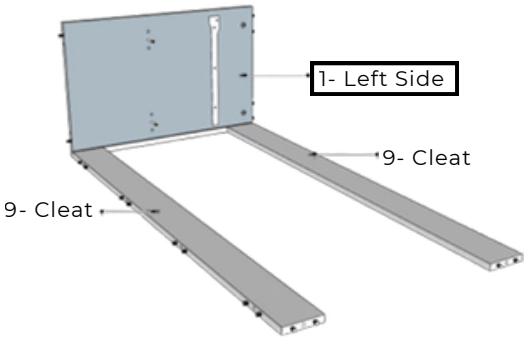

Step 5:

Attach fixed shelf to left side and fasten cams

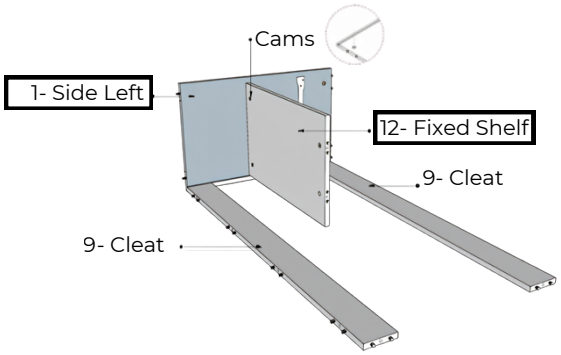

Step 6:

Attach partition to fixed shelf and tighten cams

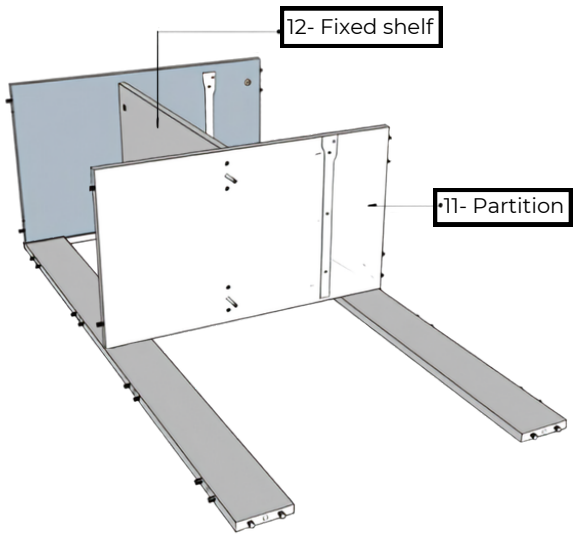

PARIS SERVER UNIT ASSEMBLY INSTRUCTIONS

CABINET ASSEMBLY

Step 7:

Attach fixed shelf to partition and tighten cams

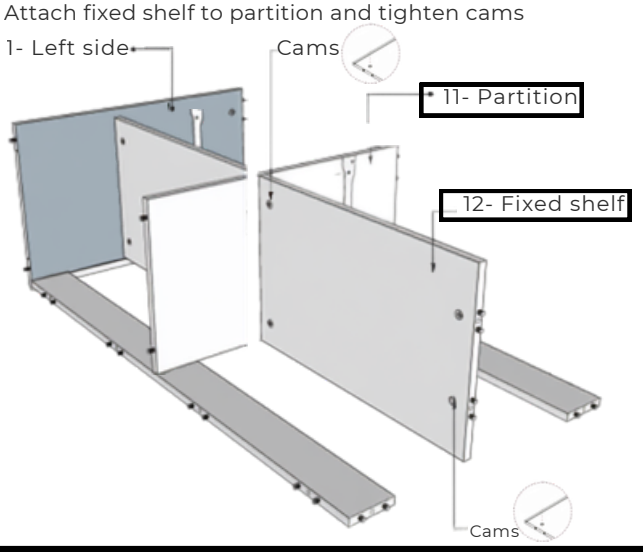

Step 8:

Attach right side to fixed shelf and cleats
Tighten cams in fixed shelf only

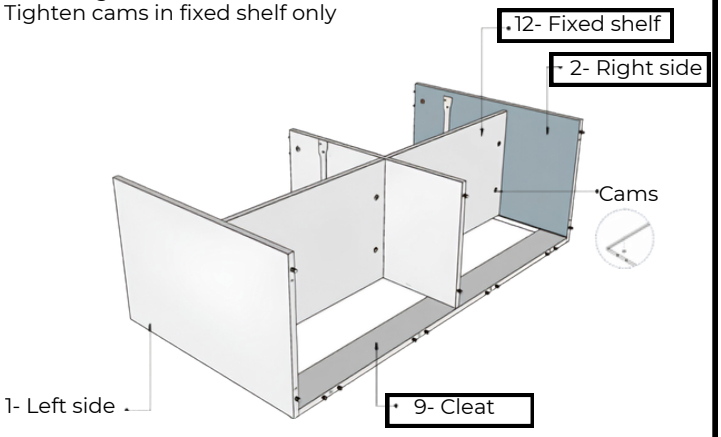

Step 9:

Attach top to assembly by sliding cam pins into holes in left side, right side and partition. Tighten cams in left side, right slide and partition.

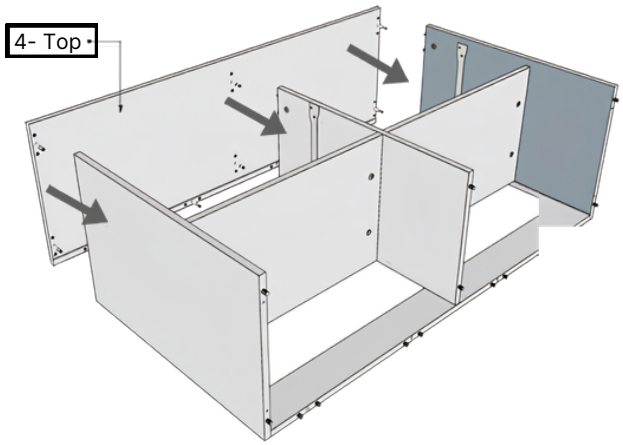

Step 10:

Tighten cams on back of cleatsSlide in cabinet backing into grooves in sides and top, bigger section of backing goes in first

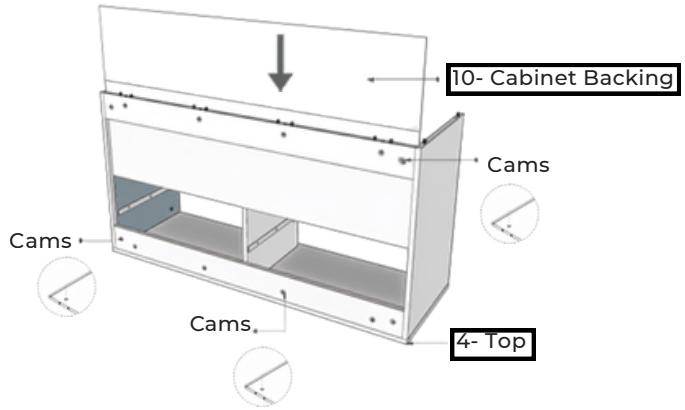

Step 11:

Position bottom over assembly so that all the dowel holes line up
Fasten with confirmat screws
Fasten cams on back of cleat that attaches to the bottom

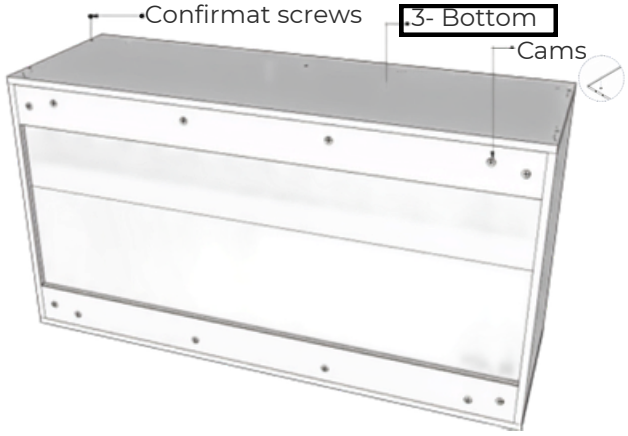

Step 12:

Attach legs to assembly using pre-drilled holes in bottom and supplied screws

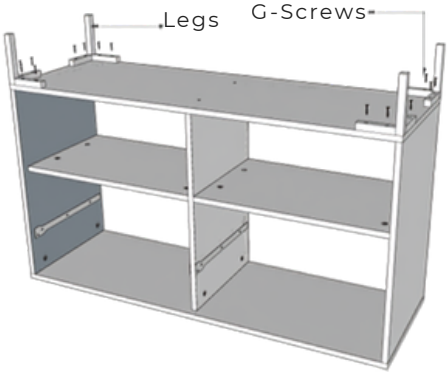

CLEANING INSTRUCTIONS
NB: Clean with a damp cloth only.
Excessive water will cause damage, voiding the warranty.



PARIS SERVER UNIT ASSEMBLY INSTRUCTIONS

CABINET ASSEMBLY

Step 13:

Attach hinges to doors with supplied silver screws
Attach handle to door with supplied screws

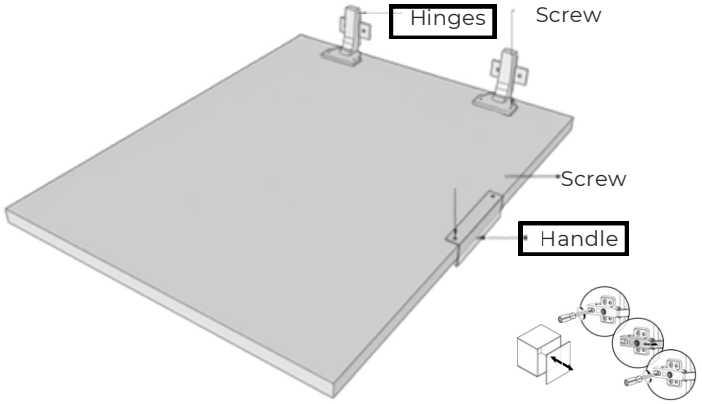

Step 14:

Attach doors to cabinet sides by aligning it with the pre-drilled holes and fastening with supplied screws

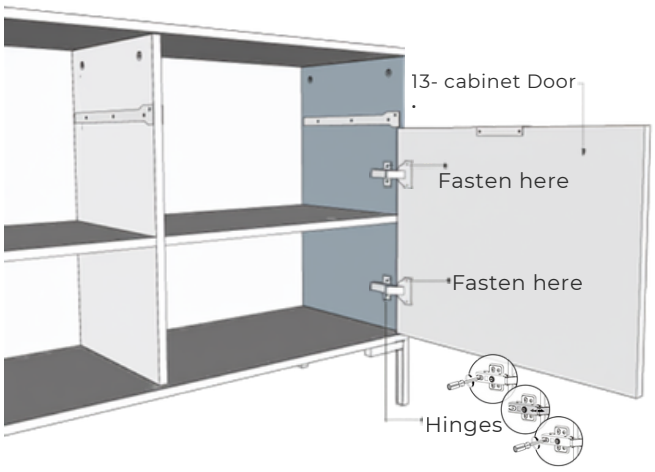

Step 15:

After drawer assembly is done, insert drawers into cabinet assembly by slightly tilting the drawer assembly downward and pressing forward. Make sure the wheels are running inside the guides.

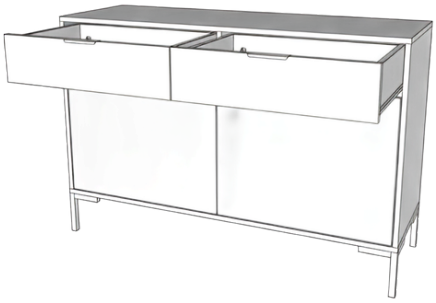

Completed assembly



PARIS SERVER UNIT ASSEMBLY INSTRUCTIONS

DRAWER ASSEMBLY

step 1:

Insert cam pins into drawer front and drawer sides
Attach handle to the back of the drawer front with supplied screws in pre-drilled holes

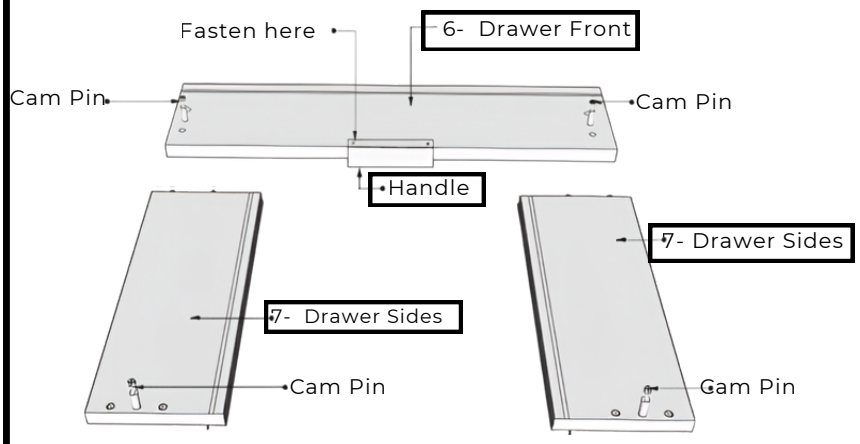

Step 2:

Insert cams into large holes in drawer sides and drawer rear, ensuring the arrow on the cam faces nearest edge

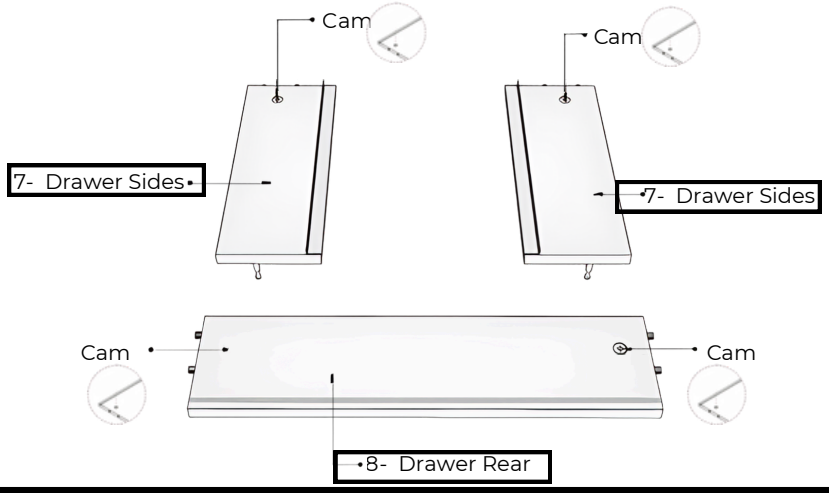

Step 3:

Attach drawer sides to drawer rear and tighten cams

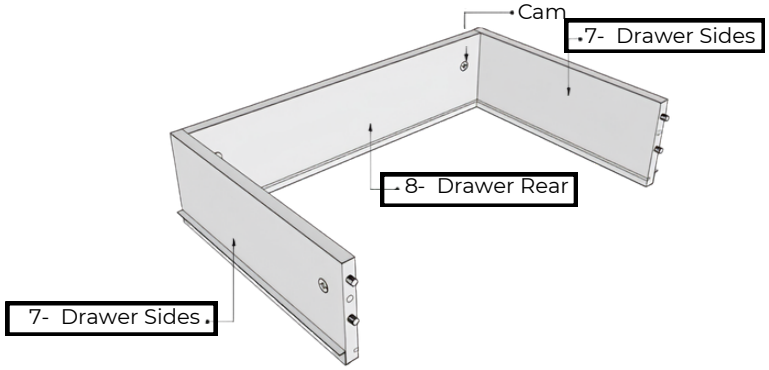

Step 4:

Slide drawer bottom into the grooves on the drawer sides and drawer rear

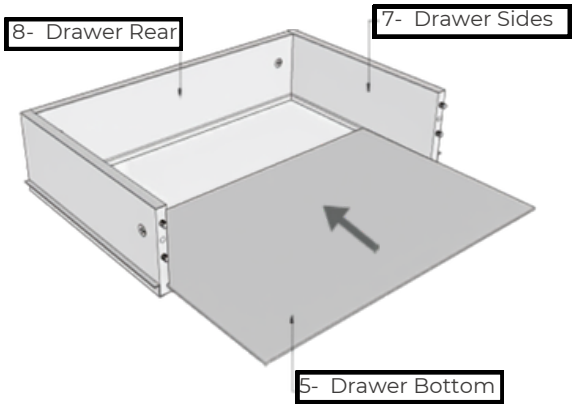

Step 5:

Attach drawer front to drawer assembly by sliding the cam pins into the holes on the drawer sides and tightening the cams. Ensure that the drawer bottom fits into the groove in the drawer front

